Soft-Lite® Windows
Bringing quality to light.
10250 Philipp Parkway
Streetsboro, Ohio 44241

L. F. SCHMIDT LICENSE No. 43409 STATE OF FLORIDA PROFESSIONAL ENGINEER

Digitally signed by Lyndon F Schmidt
Date: 2023.07.05 12:03:06 -04'00'

This item has been digitally signed and sealed by **L. F. Schmidt, P.E.** on the date adjacent to the seal.

Printed copies of this document are not considered signed and sealed and the signature must be verified on any electronic copies.

THIS PRODUCT APPROVAL IS VALID ONLY FOR THE STATE OF FLORIDA

"DSL12" / "DSL12E"
Double Slider Window
"NON-IMPACT"

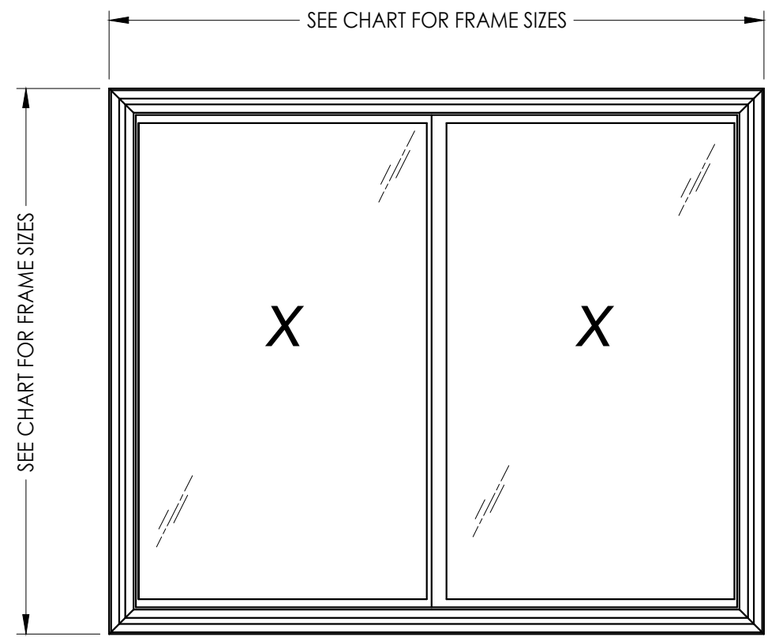

GENERAL NOTES

1. This product has been evaluated and is in compliance with the 8th Edition (2023) Florida Building Code (FBC) structural requirements excluding the "High Velocity Hurricane Zone" (HVHZ).
2. Product anchors shall be as listed and spaced as shown on details. Anchor embedment to base material shall be beyond wall dressing or stucco.
3. When used in areas requiring wind borne debris protection, this product is required to be protected with an impact resistant covering that complies with FBC Sections 1609.1.2 & R301.2.1.2.
4. For 2x stud framing construction, anchoring of these units shall be the same as that shown for 2x buck masonry construction.
5. Site conditions that deviate from the details of this drawing require further engineering analysis by a licensed engineer or registered architect.

MAX. FRAME DIMENSION	MAX. D.L.O. DIMENSION	GLASS TYPE	DESIGN PRESSURE (PSF)	
			POSITIVE	NEGATIVE
74.0" X 50.0"	33.5" x 42.5"	G1	+50.0	-50.0
72.0" X 60.0"	31.5" x 52.5"	G1	+35.0	-35.0

TABLE OF CONTENTS

SHEET#	DESCRIPTION
1	Typical elevations, design pressures and general notes
2	Horizontal and vertical cross sections
3	Buck and frame anchoring
4	Bill of materials, components and glazing details

Documents Prepared By:
Lyndon F. Schmidt
P.E. No. 43409
RW BUILDING CONSULTANTS, INC.
P.O. Box 230, Valrico, FL 33595
Phone No.: 813.659.9197
FBPE Registry No. 9813

PRODUCT: SOFT-LITE WINDOWS

PART OR ASSEMBLY: TYPICAL ELEVATION, DESIGN PRESSURES & GENERAL NOTES

REVISIONS

NO.	DATE		BY
5	7/05/23	UPDATE TO 8TH ED. (2023) FBC	LFS
4	7/13/20	UPDATE TO 7TH ED. (2020) FBC	LFS
3	3/11/20	ADD OPTIONAL FRAMES	LFS
2	8/25/17	UPDATE TO 6TH ED. (2017) FBC	JK
1	4/21/15	UPDATE TO 5TH ED. (2014) FBC	JK

DATE: 7/6/12
SCALE: N.T.S.
DWG. BY: JK
CHK. BY: LFS
DRAWING NO.: FL-15781.1
SHEET 1 OF 4

© 2013 R.W. Building Consultants Inc.

D:\2023 FBC DRAWINGS\Soft-Lite\FL-15781 R14\FL-15781.1.dwg

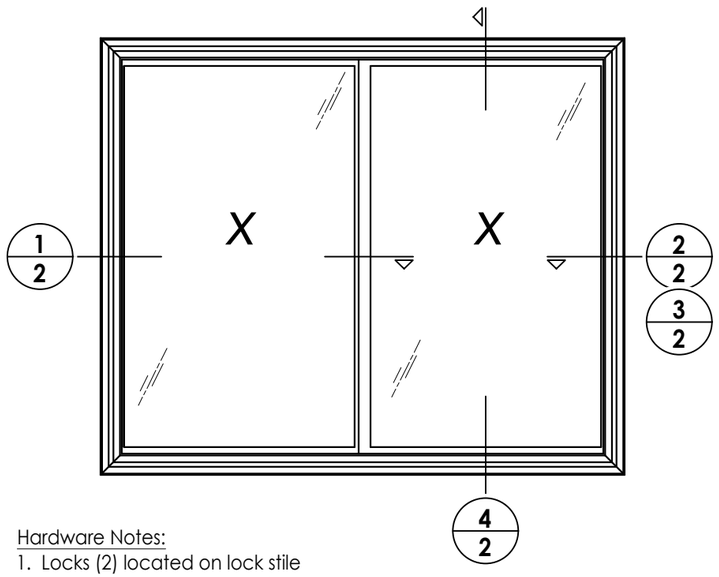

Hardware Notes:
1. Locks (2) located on lock stile 8"-10" from each head & sill.

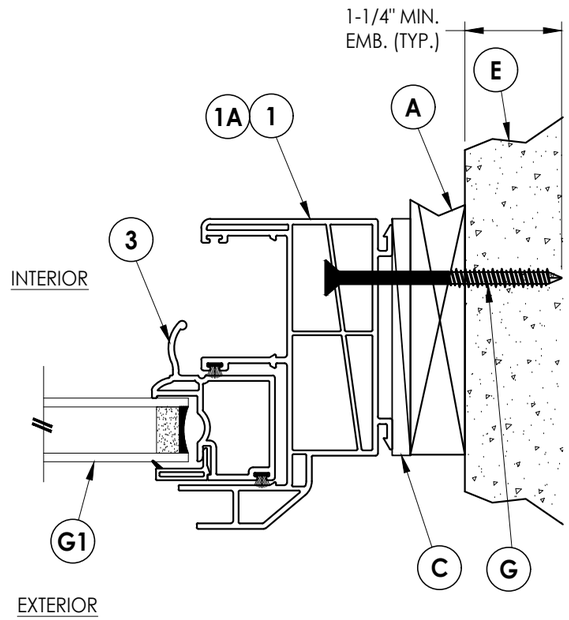

3/2 VERTICAL CROSS SECTION
Shown w/ 1X buck

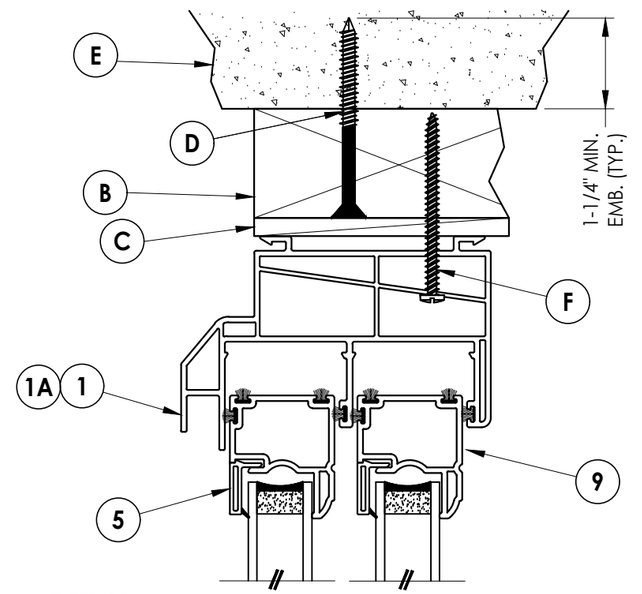

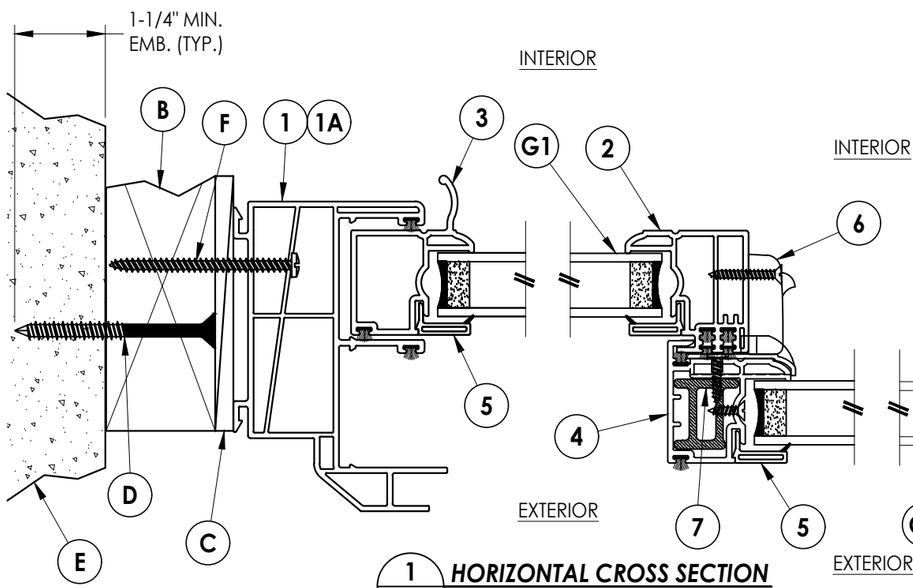

1/2 HORIZONTAL CROSS SECTION
Shown w/ 2X buck

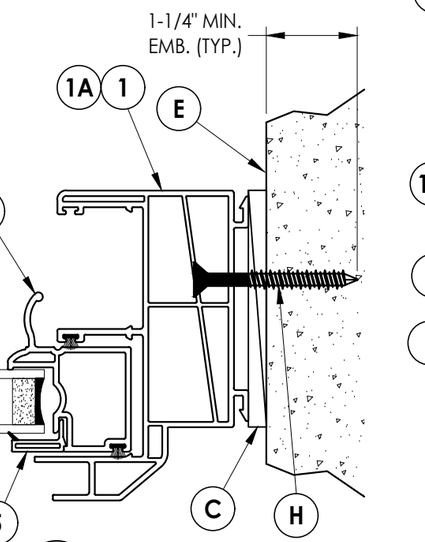

2/2 HORIZONTAL CROSS SECTION
Shown direct to masonry

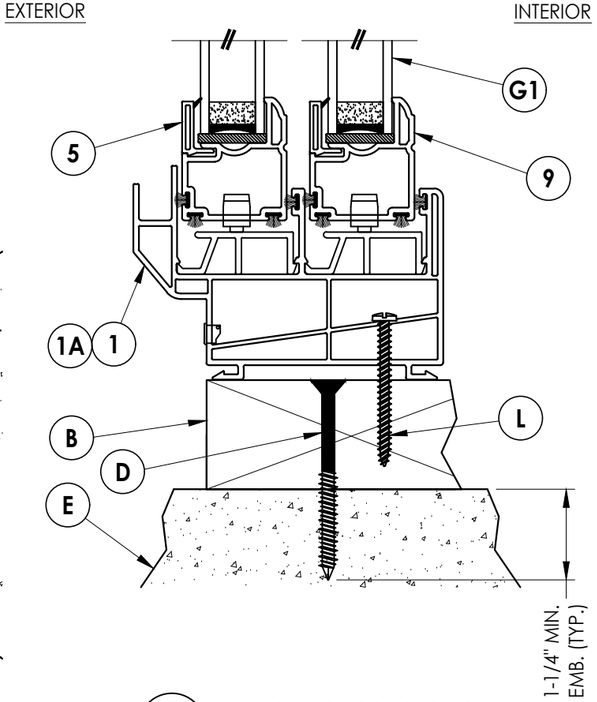

4/2 VERTICAL CROSS SECTION
Shown w/ 2X buck

Documents Prepared By:
Lyndon F. Schmidt
P.E. No. 43409

RW BUILDING CONSULTANTS, INC.
P.O. Box 230, Valrico, FL 33595
Phone No.: 813.659.9197
FBPE Registry No. 9813

PRODUCT: SOFT-LITE WINDOWS

PART OR ASSEMBLY: HORIZONTAL AND VERTICAL CROSS SECTIONS

REVISIONS

NO.	DATE		BY
5	7/05/23	UPDATE TO 8TH ED. (2023) FBC	LFS
4	7/13/20	UPDATE TO 7TH ED. (2020) FBC	LFS
3	3/11/20	ADD OPTIONAL FRAMES	LFS
2	8/25/17	UPDATE TO 6TH ED. (2017) FBC	JK
1	4/21/15	UPDATE TO 5TH ED. (2014) FBC	JK

DATE: 7/6/12
SCALE: N.T.S.
DWG. BY: JK
CHK. BY: LFS
DRAWING NO.: FL-15781.1
SHEET 2 OF 4

© 2013 R.W. BUILDING CONSULTANTS INC.

D:\2023 FBC DRAWINGS\Soft-Lite\FL-15781 R14\FL-15781.1.dwg

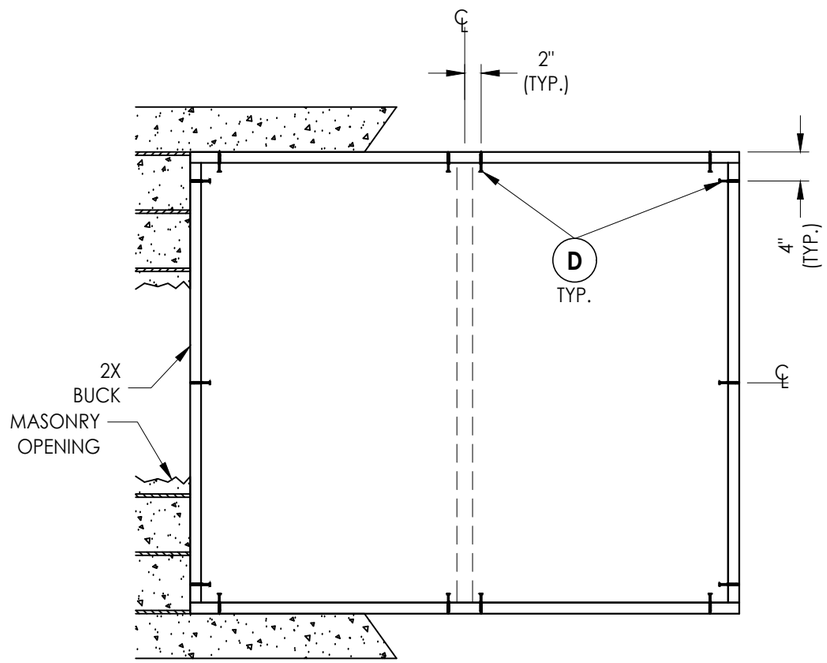

BUCK ANCHORING

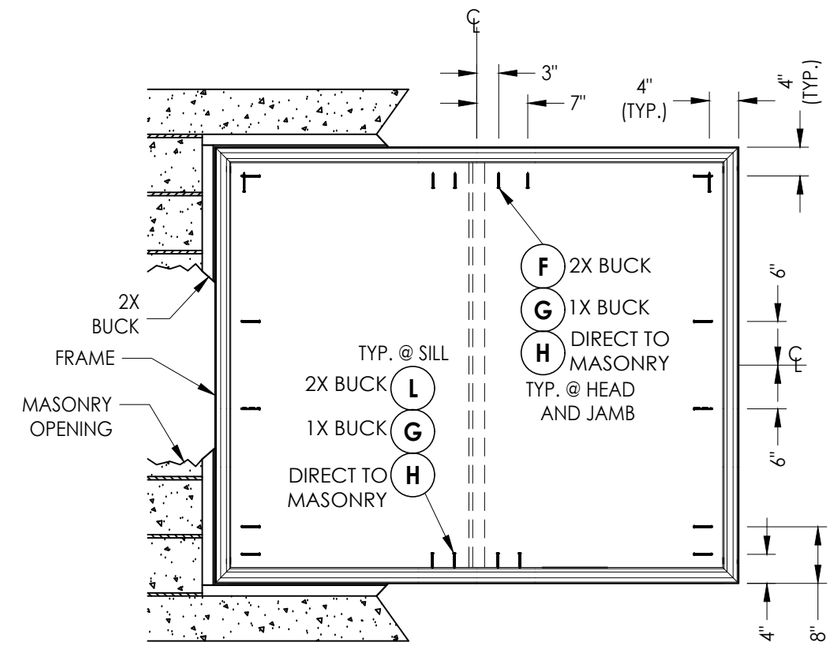

FRAME ANCHORING

CONCRETE ANCHOR NOTES:

1. *Concrete anchor locations at the corners may be adjusted to maintain the min. edge distance to mortar joints.*
2. *Concrete anchor locations noted as "MAX. ON CENTER" must be adjusted to maintain the min. edge distance to mortar joints, additional concrete anchors may be required to ensure the "MAX. ON CENTER" dimension are not exceeded.*
3. *Concrete anchor table:*

ANCHOR TYPE	ANCHOR SIZE	MIN. EMBEDMENT	MIN. CLEARANCE TO MASONRY EDGE	MIN. CLEARANCE TO ADJACENT ANCHOR
ITW TAPCON®	1/4"	1-1/4"	2"	4"
DeWALT ULTRACON+®	1/4"	1-1/4"	1"	4"

WOOD SCREW INSTALLATION NOTES:

1. *Maintain a minimum 5/8" edge distance, 1" end distance, & 1" o.c. spacing of wood screws to prevent the splitting of wood.*

Documents Prepared By:
Lyndon F. Schmidt
P.E. No. 43409
R.W. BUILDING CONSULTANTS, INC.
P.O. Box 230, Valrico, FL 33595
Phone No.: 813.659.9197
FBPE Registry No. 9813

PRODUCT: SOFT-LITE WINDOWS

PART OR ASSEMBLY: BUCK AND FRAME ANCHORING

REVISIONS

NO.	DATE		BY
5	7/05/23	UPDATE TO 8TH ED. (2023) FBC	LFS
4	7/13/20	UPDATE TO 7TH ED. (2020) FBC	LFS
3	3/11/20	ADD OPTIONAL FRAMES	LFS
2	8/25/17	UPDATE TO 6TH ED. (2017) FBC	JK
1	4/21/15	UPDATE TO 5TH ED. (2014) FBC	JK

DATE: 7/6/12
SCALE: N.T.S.
DWG. BY: JK
CHK. BY: LFS
DRAWING NO.: FL-15781.1
SHEET 3 OF 4

© 2013 R.W. Building Consultants Inc.

D:\2023 FBC DRAWINGS\Soft-Lite\FL-15781 R14\FL-15781.1.dwg

BILL OF MATERIALS

ITEM #	DESCRIPTION	MATERIAL
A	1X BUCK SG >= 0.42	WOOD
B	2X BUCK SG >= 0.42	WOOD
C	1/4" MAX. SHIM SPACE	-
D	1/4" X 2-3/4" PFH DeWALT OR ITW CONCRETE SCREW	STEEL
E	MASONRY - 3,000 PSI MIN. CONCRETE CONFORMING TO ACI 301 OR HOLLOW BLOCK CONFORMING TO ASTM C90	CONCRETE
F	#10 X 2-1/2" PPH SMS (1-3/8" MIN. EMBEDMENT)	STEEL
G	1/4" X 2-3/4" PFH DeWALT OR ITW CONCRETE SCREW	STEEL
H	1/4" X 2-1/4" PFH DeWALT OR ITW CONCRETE SCREW	STEEL
L	#10 X 2" PPH SMS (1-1/8" MIN. EMBEDMENT)	STEEL
1, 1A	MAIN FRAME*	PVC
2	LOCK STILE*	PVC
3	PULL STILE*	PVC
4	MEETING STILE*	PVC
5	GLAZING BEAD*	PVC
6	CAM LOCK	-
7	SASH STIFFENER	COMP
9	RAIL*	PVC

* THE APPROVED WHITE RIGID PVC EXTERIOR EXTRUSIONS FOR WINDOWS ARE TO BE PRODUCED BY EXTRUDERS LICENSEES IN "AAMA CERTIFICATIONS PROGRAMS FOR RIGID PVC EXTRUSIONS".

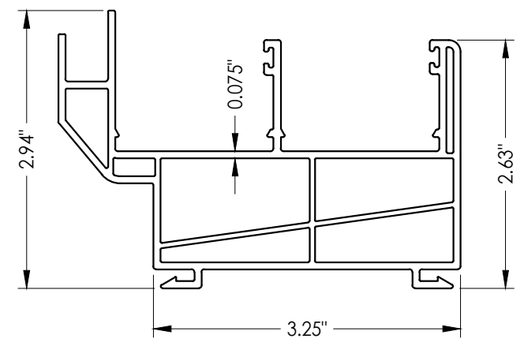

1 MAIN FRAME
"DSL12"

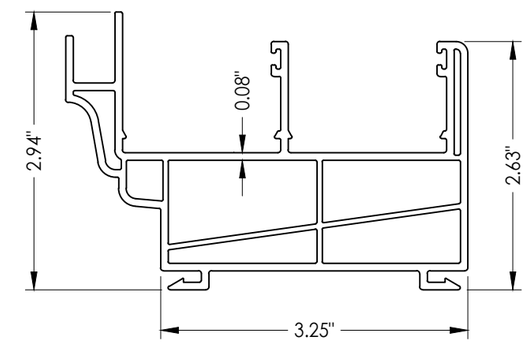

1A MAIN FRAME
"DSL12E"

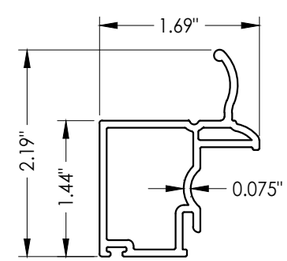

3 PULL STILE

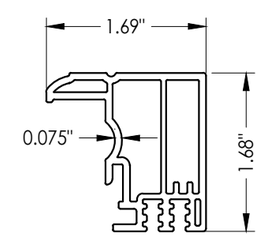

2 LOCK STILE

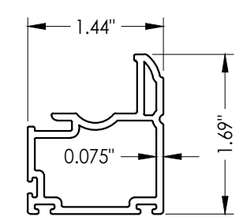

9 RAIL

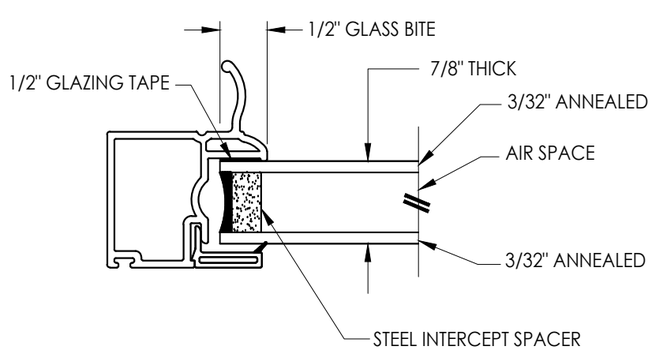

G1 GLAZING DETAIL

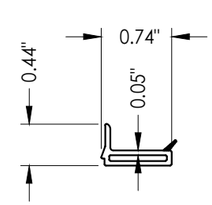

5 GLAZING BEAD

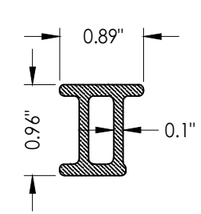

7 SASH STIFFENER

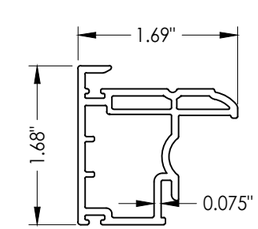

4 MEETING STILE

Documents Prepared By:
Lyndon F. Schmidt
P.E. No. 43409

RW BUILDING CONSULTANTS, INC.
P.O. Box 230, Valrico, FL 33595
Phone No.: 813.659.9197
FBPE Registry No. 9813

PRODUCT: SOFT-LITE WINDOWS

PART OR ASSEMBLY: BILL OF MATERIALS, COMPONENTS AND GLAZING DETAIL

REVISIONS

NO.	DATE		BY
5	7/05/23	UPDATE TO 8TH ED. (2023) FBC	LFS
4	7/13/20	UPDATE TO 7TH ED. (2020) FBC	LFS
3	3/11/20	ADD OPTIONAL FRAMES	LFS
2	8/25/17	UPDATE TO 6TH ED. (2017) FBC	JK
1	4/21/15	UPDATE TO 5TH ED. (2014) FBC	JK

DATE: 7/6/12
SCALE: N.T.S.
DWG. BY: JK
CHK. BY: LFS
DRAWING NO.: FL-15781.1
SHEET 4 OF 4

© 2013 R.W. Building Consultants Inc.

D:\2023 FBC DRAWINGS\Soft-Lite\FL-15781 R14\FL-15781.1.dwg